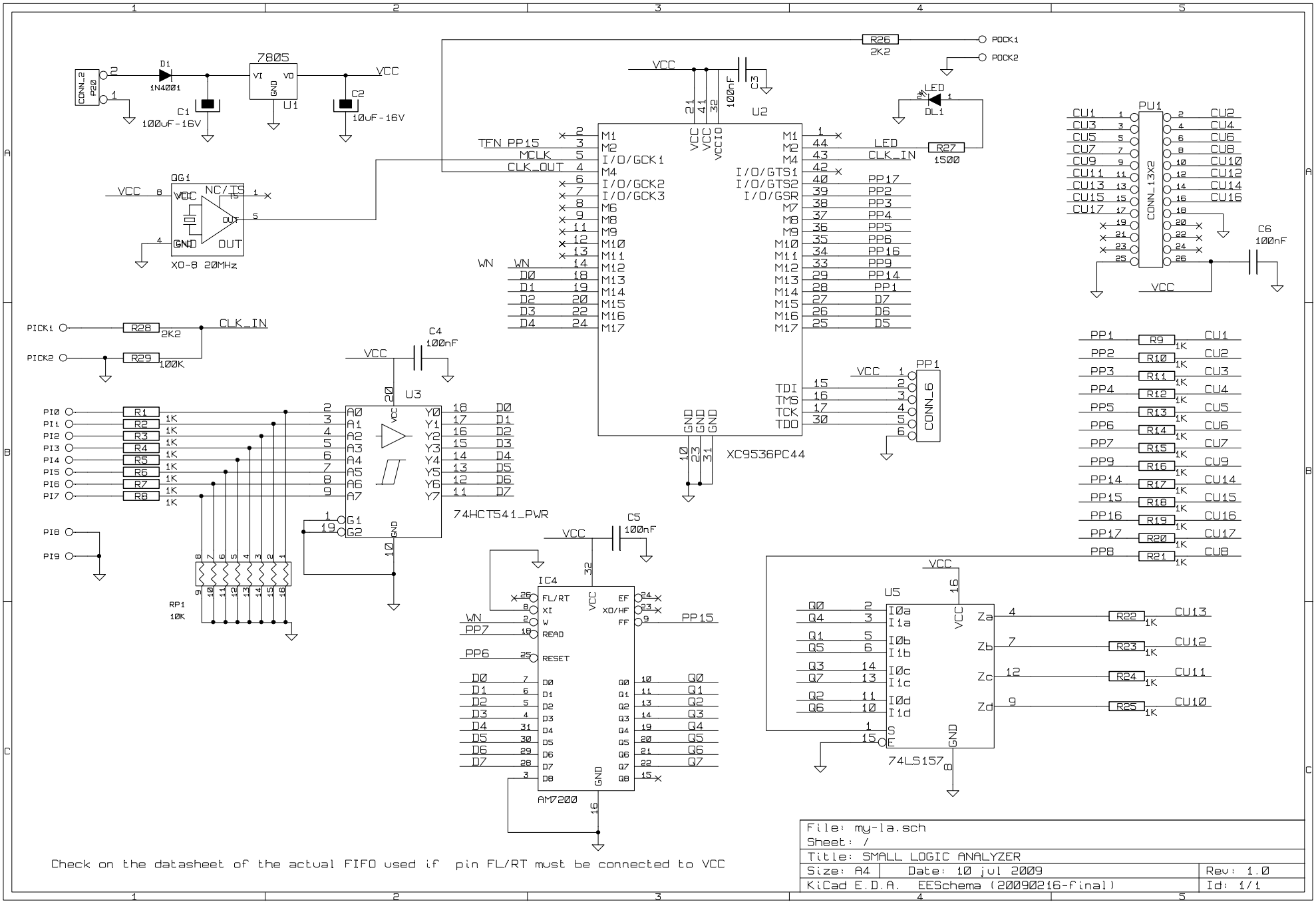

Check on the datasheet of the actual FIFO used if pin FL/RT must be connected to VCC

File: my-la.sch		
Sheet: /		
Title: SMALL LOGIC ANALYZER		
Size: A4	Date: 10 jul 2009	Rev: 1.0
KiCad E.D.A. EESchema (20090216-final)		Id: 1/1